TOTO

Specification Sheet

LW542J

IDR 1,684,000.00

Height: 120

Width: 650 mm

Depth: 450 mm

LW 542 J

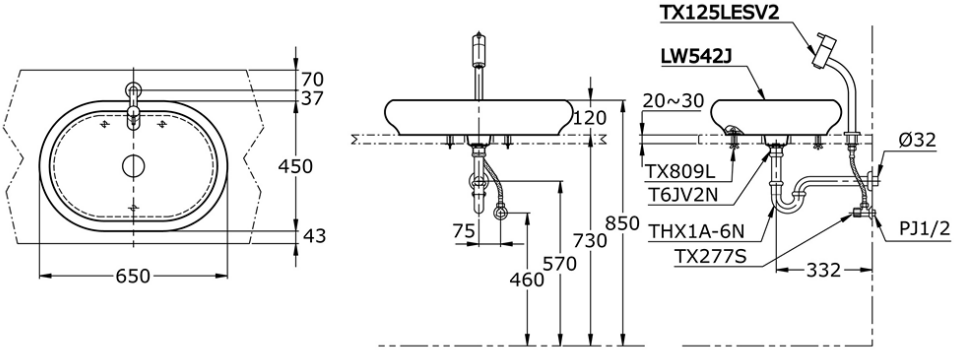

Some products may not be available in your area
Prices indicated are manufacturer's suggested retail price, prices may change anytime without notice.
Please check with your nearest reseller for updated prices.
Prices shown for lavatory does not include faucet.